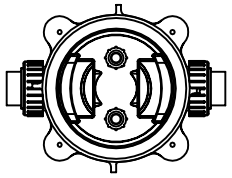

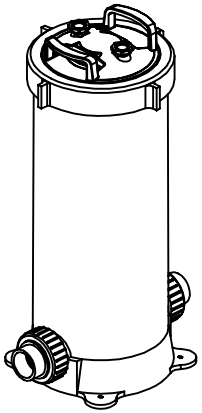

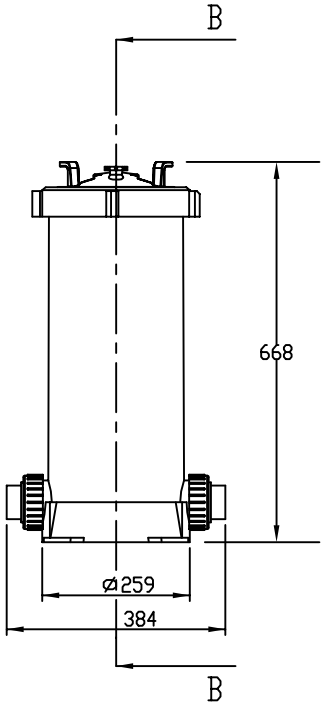

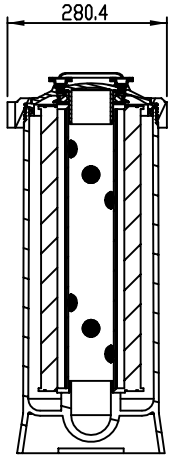

SECTION B-B

Letter	Date		App
Letter	Date	Change	App

GENERAL TOLERANCES

Unless otherwise specified
Dim are in mm Tol:

0 - 12	±0.10	89 - 152	±0.28
13 - 38	±0.14	153 - 228	±0.45
39 - 88	±0.21	229 - 330	±0.80
		330 - 457	±1.15

Remove all burrs & sharp edges 0.15R

PRINT DISTRIBUTION

Production	Spare Parts
Inspection	Purchase
Method	Assembly
Accounts	Service Dept

MACHINE SYMBOL

Clean	∞
Rough M/C	▼
Fine M/C	▼▼
Grind	▼▼▼

Supersedes-

Superseded by-

Drn	YLZ	Date	13/7/05
Scale	1:10	Proj.	
Check	YLZ	App	PT
Matl.			

OK FOR PRODUCTION | DATE

WATERCO LTD
36 South Street, RYDALMERE NSW 2116, AUSTRALIA

Type & Part

ASSEMBLY - CC75
TRIMLINE CARTRIDGE FILTER

Drg.No. TCF_ASS_001 - EDIT CC75